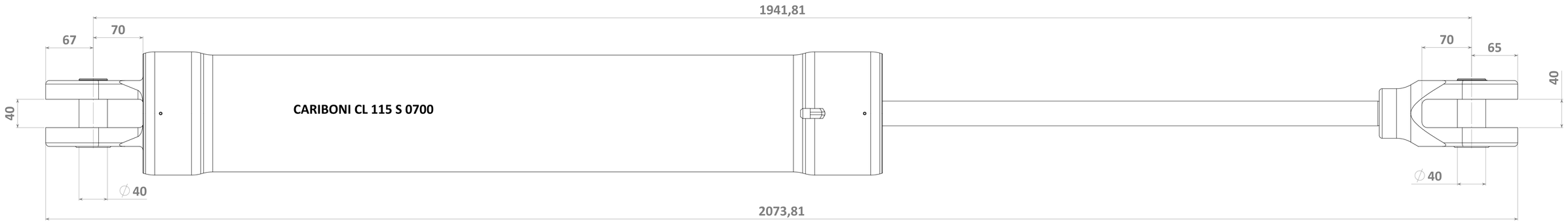

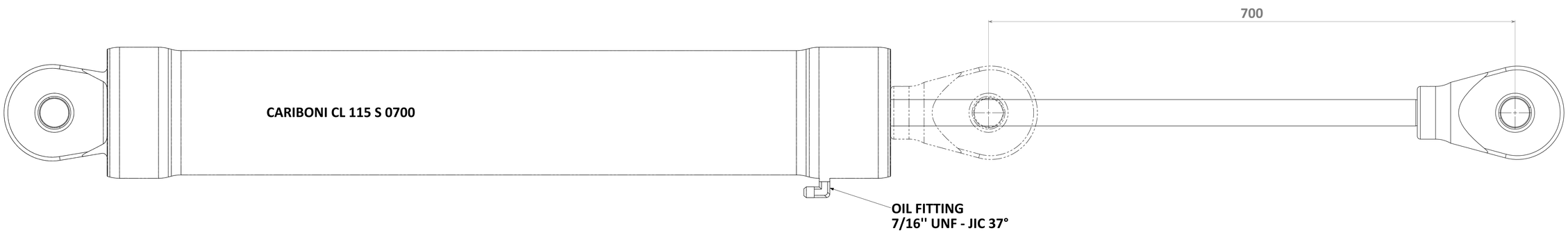

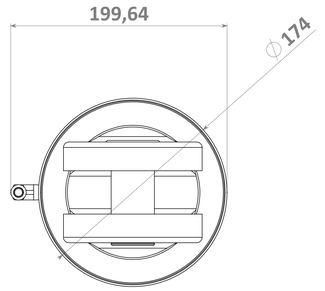

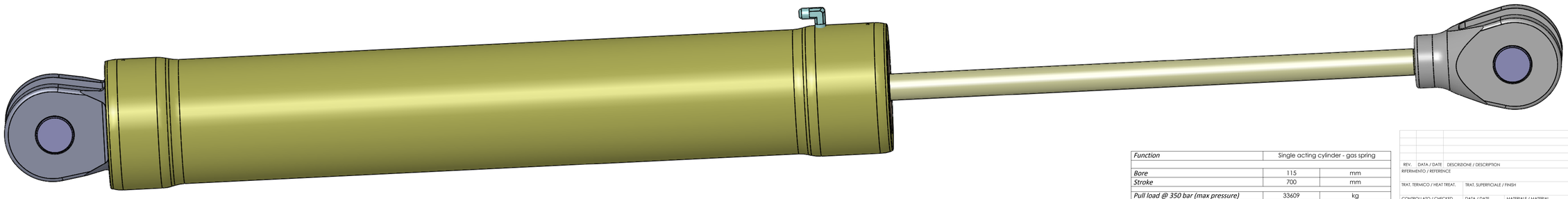

Function	Single acting cylinder - gas spring	
Bore	115	mm
Stroke	700	mm
Pull load @ 350 bar (max pressure)	33609	kg
Pull load @ 250 bar	24006	kg
Pull load @ 200 bar	19205	kg
Approx. dry weight	21.8	kg
Max oil volume	6.6	l

REV.	DATA / DATE	DESCRIZIONE / DESCRIPTION	NOME / NAME
RIFERIMENTO / REFERENCE			TABLE 1/1 SIZE A0

TRAT. TERMICO / HEAT TREAT. | TRAT. SUPERFICIALE / FINISH

CONTROLLATO / CHECKED | DATA / DATE | MATERIALE / MATERIAL

APPROVATO / APPROVED | DATA / DATE | SCALA / SCALE | PESO/ WEIGHT kg

DISEGNO N. / DRAWING: CL_115_S_0700 - REV.

DESCRIZIONE / DESCRIPTION: CL 115 SINGLE ACTING STROKE 700

CARIBONI S.r.l.
Via Mattei 3/A
20885 Ronco Briantino
e-mail: info@cariboni-italy.it
www.cariboni-italy.com
CARIBONI
Tel +39 039 6079609
fax +39 039 6079128

ATTENTION! THIS DOCUMENT AND THE INFORMATION IT CONTAINS SHALL NOT BE REPRODUCED NOR DISCLOSED TO ANYBODY, BECAUSE PROPERTY OF CARIBONI S.r.l.